ITEM #

MODEL #

NAME #

SIS #

AIA #

Planetary Mixers
Planetary Mixer, 5 lt. - Electronic



600137 (DBE5BY)

5 lt planetary mixer, bowl detection device, electronic speed variation. Equipped with stainless steel spiral hook, paddle and whisk. Equipped with highly resistant safety screen - BPA free

Short Form Specification

Item No.

Suitable for all kneading, blending and whipping operations. Aluminium body and metal base for complete stability. 5 litre capacity 18/10 (AISI 304) stainless steel bowl. Powerful asynchronous motor with electronic speed variation from 20 to 220 rpm (planetary movement). Removable/transparent solid safety screen - made of a bisphenol-A free (BPA) copolyester - activates the raising and lowering of the bowl. Bowl detection device allows the mixer to switch on only when the bowl and the safety screen are properly installed and positioned together. Supplied with 3 stainless steel dw safe tools: spiral hook, paddle and whisk.

APPROVAL:

Main Features

- Professional compact table top beater mixer for intensive kneading, mixing and whipping.
- Maximum capacity 1.5 kg flour, with 60% of hydration.
- Delivered with: Spiral Hook, Paddle, Wire Whisk and Mixing Bowl for 5 lt. All made in stainless steel and dishwasher safe.
- Tools shape and size perfectly adapt to the bowl for uniform mixing of even small quantities.
- Electronic speed variator.
- Ergonomic and reliable knob to select the speed adjusting to the tool and mixture hardness.
- Removable safety screen activates the raising and lowering of the bowl.
- Bowl detection device allows the mixer to switch on only when the bowl and the solid safety screen are properly installed and positioned together.

Construction

- 304 AISI stainless steel bowl - 5 lt capacity.
- Compact and portable design.
- Asynchronous motor with high start-up torque.
- Variable speed from 20 to 220 rpm (planetary movement), to adjust to the selected tool and mixture hardness.
- Planetary movement based on self lubricating gears, eliminating any risk of leaks.
- Water protected planetary system (IP55 electrical controls, IP34 appliance overall).
- Transparent solid safety screen made of Eastman Tritan™ copolyester BPA free, impact resistant and stays clear and durable after several dishwashing cycle. Eastman&Tritan are trademarks for Eastman Chemical Company.
- Variable speed rotation of the tools from 67 rpm to 740 rpm.

Included Accessories

- 1 of BOWL FOR 5LT MIXER PNC 653295
- 1 of S/S PADDLE FOR 5LT MIXER PNC 653756
- 1 of S/S WHISK FOR 5LT MIXER PNC 653757
- 1 of S/S SPIRAL DOUGH HOOK FOR 5LT MIXER PNC 653765

Optional Accessories

- BOWL FOR 5LT MIXER PNC 653295 ❑

- S/S PADDLE FOR 5LT MIXER PNC 653756 ❑
- S/S WHISK FOR 5LT MIXER PNC 653757 ❑
- S/S SPIRAL DOUGH HOOK FOR 5LT MIXER PNC 653765 ❑
- ADDITIONAL CLOSED SPLASH GUARD - BE5/8 WITHOUT HUB PNC 653781 ❑

The company reserves the right to make modifications to the products without prior notice. All information correct at time of printing.

Planetary Mixers
Planetary Mixer, 5 lt. - Electronic

Front

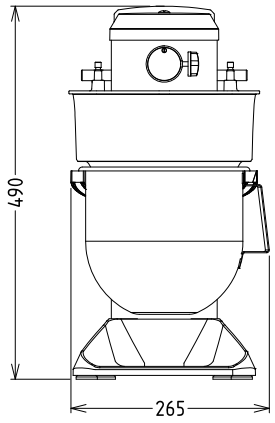

Side

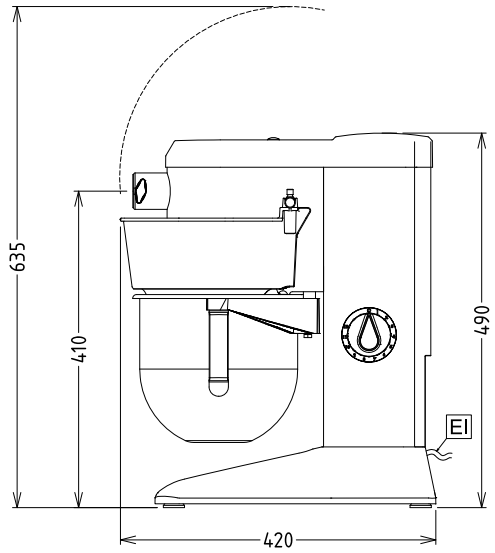

EI = Electrical inlet (power)

Top

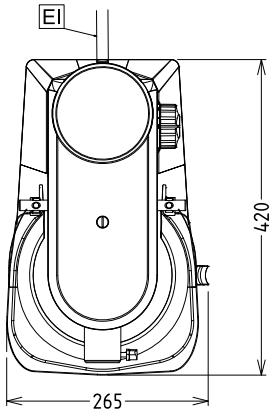

Electric	
Supply voltage:	200-240 V/1N ph/50/60 Hz
Electrical power max.:	0.45 kW
Total Watts:	0.45 kW
Capacity:	
Performance (up to):	1.5 kg/Cycle
Capacity:	5 litres
Key Information:	
External dimensions, Width:	266 mm
External dimensions, Depth:	416 mm
External dimensions, Height:	487 mm
Shipping weight:	19 kg
Net weight (kg):	17
Cold water paste:	1.5 kg with Spiral hook
Egg whites:	10 with Whisk

The company reserves the right to make modifications to the products without prior notice. All information correct at time of printing.

2026.11.19